excom I/O System
Multiprotocol Gateway for Ethernet
GEN-3G

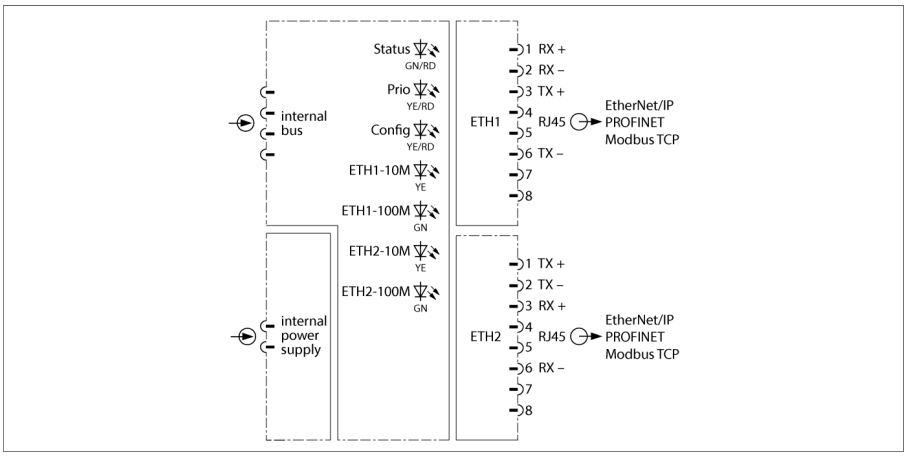

The gateway is used to connect the excom system to a higher-level Ethernet Fieldbus with the help of the Modbus TCP, Ethernet/IP and PROFINET protocols. The connection to the Fieldbus is created via a standard RJ45 male connector with at least CAT5e cable quality. A ring topology in accordance with DLR or MRP can be implemented using the built-in switch.

The gateway supports 10/100 Mbps, full/half duplex, autonegotiation and autocrossing. With autocrossing switched off, the above assignment must be followed.

A GSDML and EDS file containing all configuration files and parameter sets is available for system configuration. When connected to suitable host systems, you can change the system configuration during operation.

The gateway provides the entire range of diagnostic functions, including port-related diagnostics, in accordance with the Ethernet protocols. In addition, manufacturer-specific error codes are generated. They include HART communication errors, power supply errors, planning errors as well as information on simulators, internal communication, redundancy toggle, etc.

- Gateway for Ethernet fieldbus communication
- Connection of the excom station to the Ethernet fieldbus
- Support for Ethernet protocols Modbus TCP, EtherNet/IP and PROFINET
- Integrated switch, 10/100 Mbps
- Two RJ45 connectors for fieldbus connection

Edition • 2024-10-02T19:34:00+02:00

Type	GEN-3G
ID	100004545
Supply voltage	Via module rack, central power supply module
Power consumption	≤ 1.5 W
Power dissipation	≤ 1.5 W
Galvanic isolation	Complete galvanic isolation

Connection technology Ethernet	2 × RJ45 female connector
Protocol detection	automatic
Transmission rate	10/100 Mbps, full/half duplex, autonegotiation, autocrossing
Web server	PGM-DHCP, 192.168.1.254 (fallback)

Ex approval acc. to conformity certificate	IECEx BVS 19.0060
Ex approval acc. to conformity certificate	BVS 19 ATEX E 066
Device designation	Ⓔx II 3(2) G Ex ec ib [ib Gb] IIC T4 Gc

Displays/Operating elements	
Operational readiness	1 × green/red
Redundancy readiness	1 × yellow
Configuration	1 × yellow/red
Baud rate detection	2 × yellow, 2 × green

Ethernet/IP	
Addressing	acc. to EtherNet/IP specification
Device Level Ring (DLR)	supported
Class 1 connections (CIP)	24
Input Assembly Instance	107
Output Assembly Instance	104
Configuration Assembly Instance	106

PROFINET	
Addressing	DCP
Conformance class	B (RT)
MinCycleTime	1 ms
Diagnostics	acc. to PROFINET alarm handling
Topology detection	supported
Automatic addressing	supported
Media Redundancy Protocol (MRP)	supported

Modbus TCP	
Addressing	Static IP, BOOTP, DHCP
Supported function codes	FC1, FC2, FC3, FC4, FC5, FC6, FC15, FC16, FC23
Number of TCP connections	8
Input Data Size	max. 1024 register
Input register start address	0 (0x0000 hex)
Output Data Size	max. 1024 register
Output register start address	2048 (0x0800 hex)

Dimensions

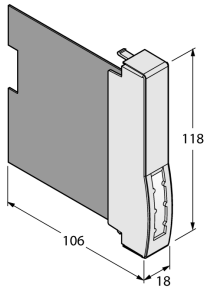

Housing material	Plastic
Connection mode	module, plugged on rack
Protection class	IP20
Ambient temperature	-40…+70 °C
Storage temperature	-40…+85 °C
Relative humidity	≤ 93 % at 40 °C acc. to IEC 60068-2-78
Vibration test	Acc. to IEC 60068-2-6
Shock test	Acc. to IEC 60068-2-27
EMC	Acc. to EN 61326-1 Acc. to Namur NE21
MTTF	58 years acc. to SN 29500 (Ed. 99) 40 °C
Dimensions	18 x 118 x 106 mm

Approvals	ATEX cFMus cFM IECEx CCC INMETRO KOSHA EAC Ex UKCA CE